Hallbrookcomponents.com
Salbæk Technology Group
support@sal-tech.com
Skype: easy.packaging

# Pressure Spring, H45-40220
# Installation Guide
# for
# Battery-Powered
# Strapping Tool

© Copyright 2021 Salbæk Technology Group

## General Information

This document is a guide for Sealing and Cutting Unit. Listed below are the machines which are compatible to the H45-40220 spare part:

- H-45L

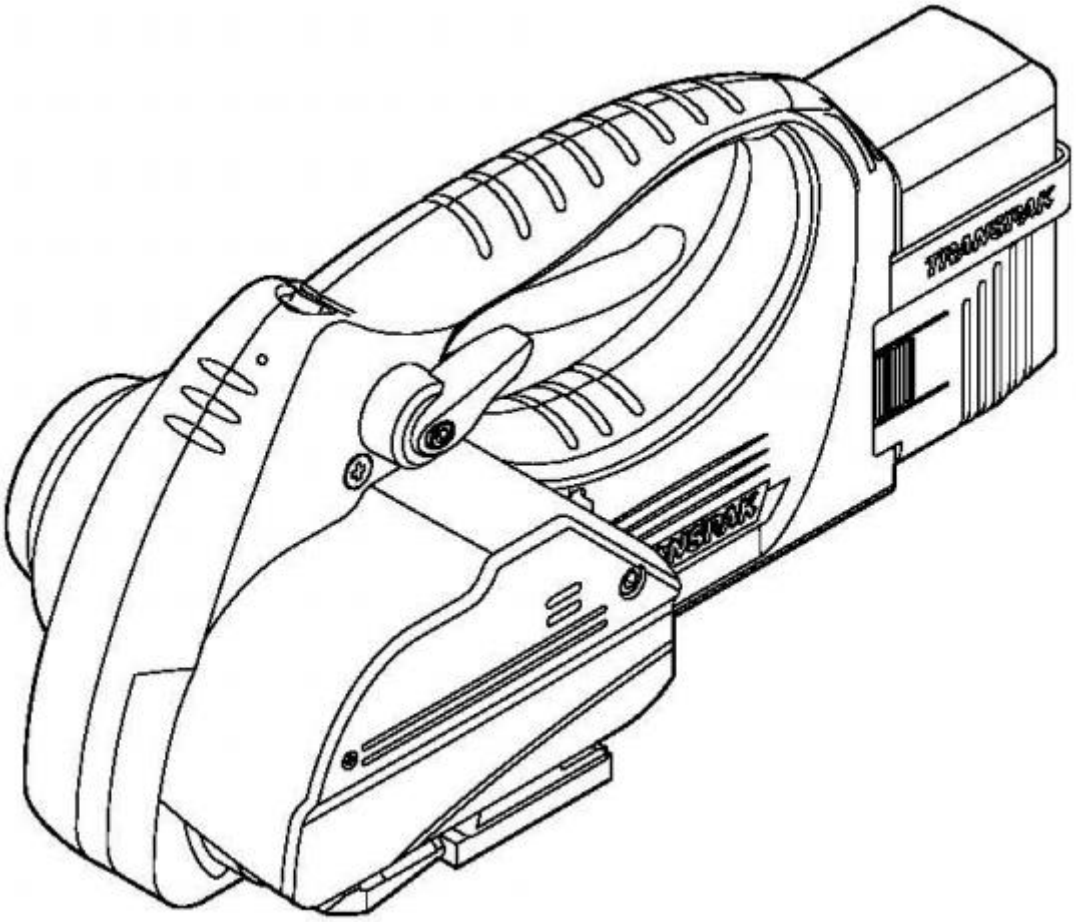

## Spare Parts Assembly

H45-40220 is a part for the Battery-Powered Strapping Tool. The Pressure Spring is connected to the following spare parts:

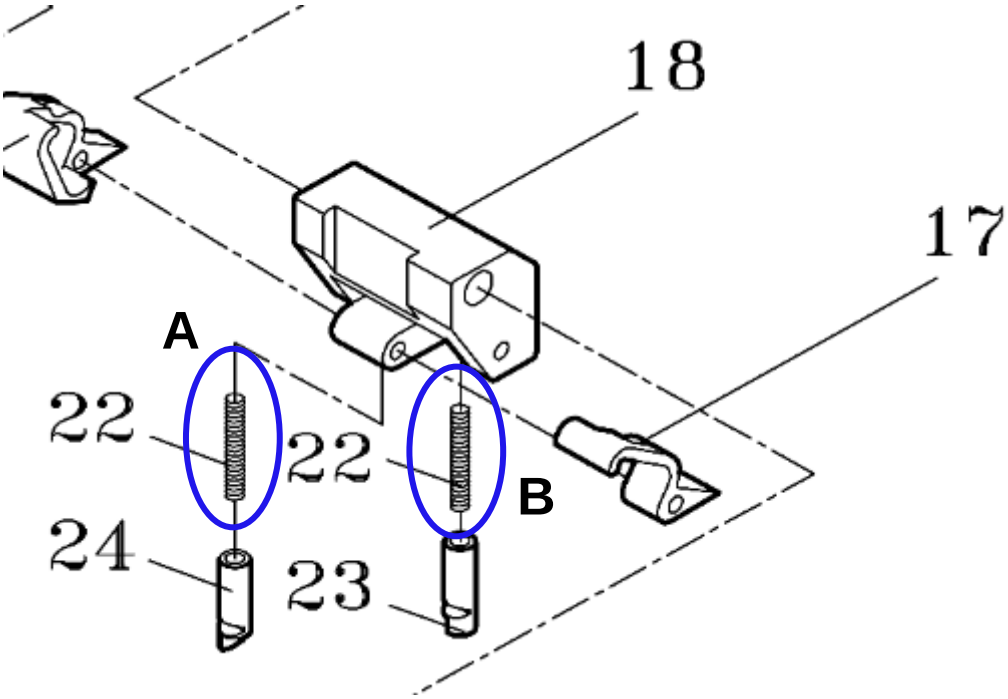


18 – Guide Case
22 – Pressure Spring
23 – Guide Pin
24 – Guide Pin

There are 2 pcs of Pressure Spring (H45-40220) installed to the Guide Case, where Pressure Spring (H45-40220) A connected to Guide Pin (H45-40240 for 12mm,16mm /H45-40231 for 9mm) and Pressure Spring (H45-40220) B connected to Guide Pin (H45-40230 for 16mm /H45-40231 for 9mm,12mm).

© Copyright 2021 Salbæk Technology Group

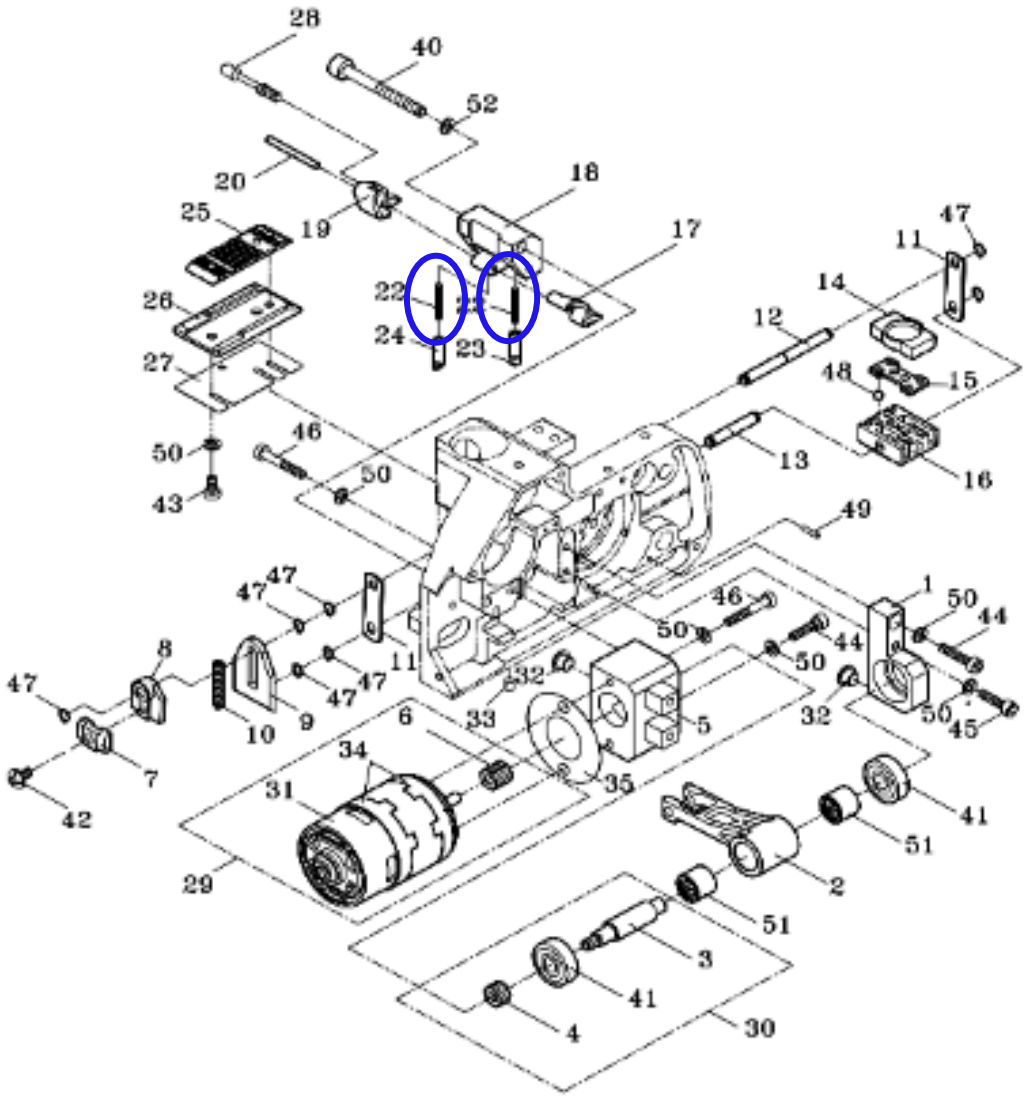


Sealing and Cutting Unit H45-40001/H45-40002

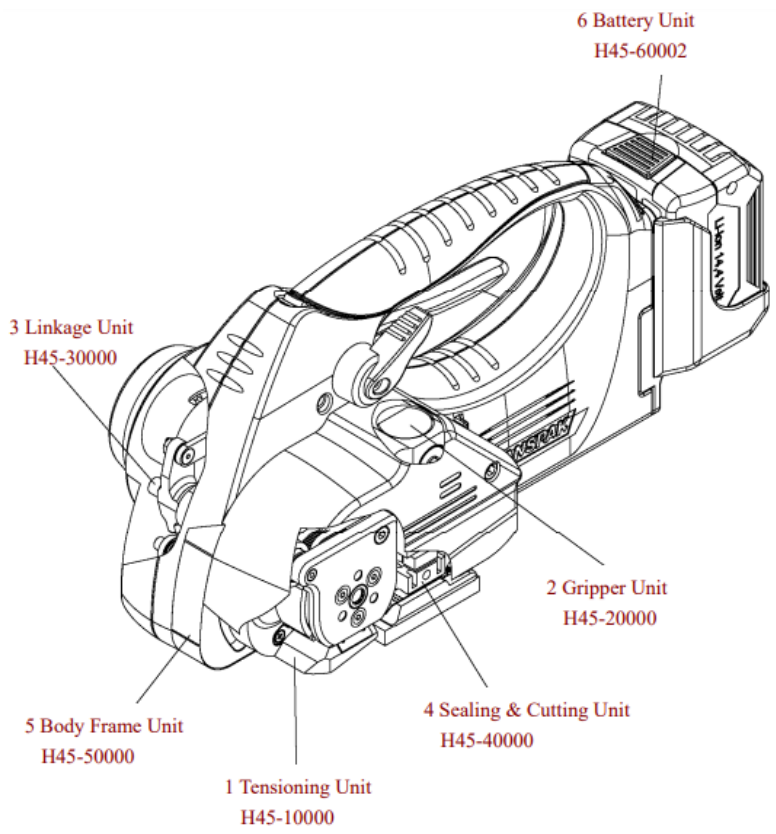


## Images

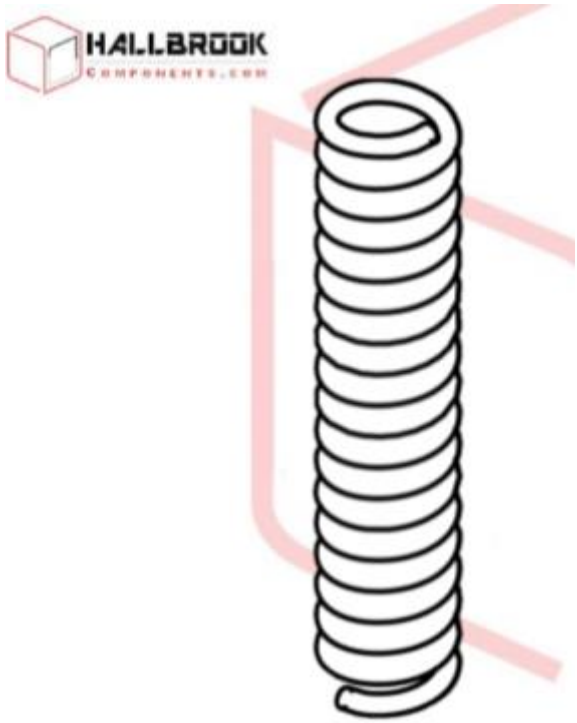


[H45-40220 Pressure Spring Drawing]

[Actual Image]

## 1. Hallbrookcomponents.com 24/7 support and contact information

Hallbrookcomponents.com part of Salbæk Technology Group that operates worldwide with office in Many countries. Our 24/7 support and hotline via these channels:

- Email: support@hallbrookcomponents.com
- Zendesk: On our websites https:\\hallbrookcomponents.com
- Skype. Easy.packaging
- Denmark phone: +45 – 7027 2220 or 3695 9804
- USA phone: +1 – 310 773 3423
- Spain phone: +34 – 699 900 987
- Italy phone: +39 – 351 988 0682
- Sweden phone: +46 – 31 799 5398
- Philippines phone: +63 - 916 777 5299
- Hong Kong phone: +852 - 8170 1025

Always check the web for latest or updated phone numbers.

*Easy Packaging since 1995.*

## 2. Hallbrookcomponents.com – Your packaging solution partner

SAL-TECH EASY PACKAGING: STRAPPING - WRAPPING - BANDING - CARTON ERECTING/CLOSING - WEIGHING - FORM, FILL & SEAL

WE ARE A INTERNATIONAL DANISH COMPANY - DANISH DESIGN, ENGINEERING & QUALITY - INTERNATIONAL SALES, PRODUCTION AND SERVICE

## 3. Disclaimer

[Disclaimer: It is not the responsibility of HBC/STEP for the service you perform and the choice and securing of skills needed by person doing the service.] All service provided under our sales & delivery terms and conditions, available on our websites.

© Copyright 2021 Salbæk Technology Group